Internet of Things: Protocols and Networks

(CSC2106)

Cellular - IoT

Preliminaries

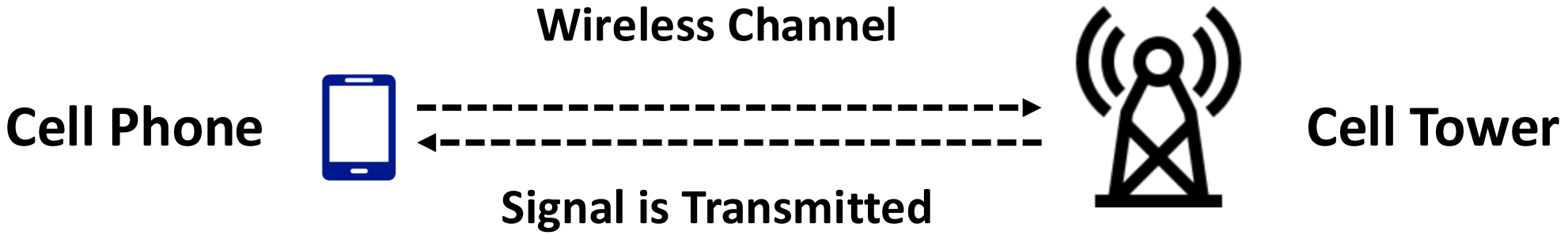

Messages are represented using bits ‘1’ and ‘0’.
For example, APPLE in binary: **0100000101010000010100000100110001000101**.

Note that the messages are not transmitted as it is.

Preliminaries

- A group of bits are **encoded** as a symbol before transmitting over a wireless medium → Known as Modulation
  - Example 1: **Binary Phase Shift Keying (BPSK)**
    - **BPSK**: the symbol for bit '1' is '+1' and for bit '0' is '-1'

0	1	0	0	1	0	0	1	→	-1	+1	-1	-1	+1	-1	-1	+1

  - Example 2: **Quadrature Phase Shift Keying (QPSK)**
    - **QPSK:** for every two bits one symbol is assigned

- Further, to generate the signal required to be transmitted, the symbols are multiplied by a carrier, a cosine function generally represented as $\cos(2*pi*f_c t)$ where f_c is the carrier frequency.

Preliminaries

- How single users send data?

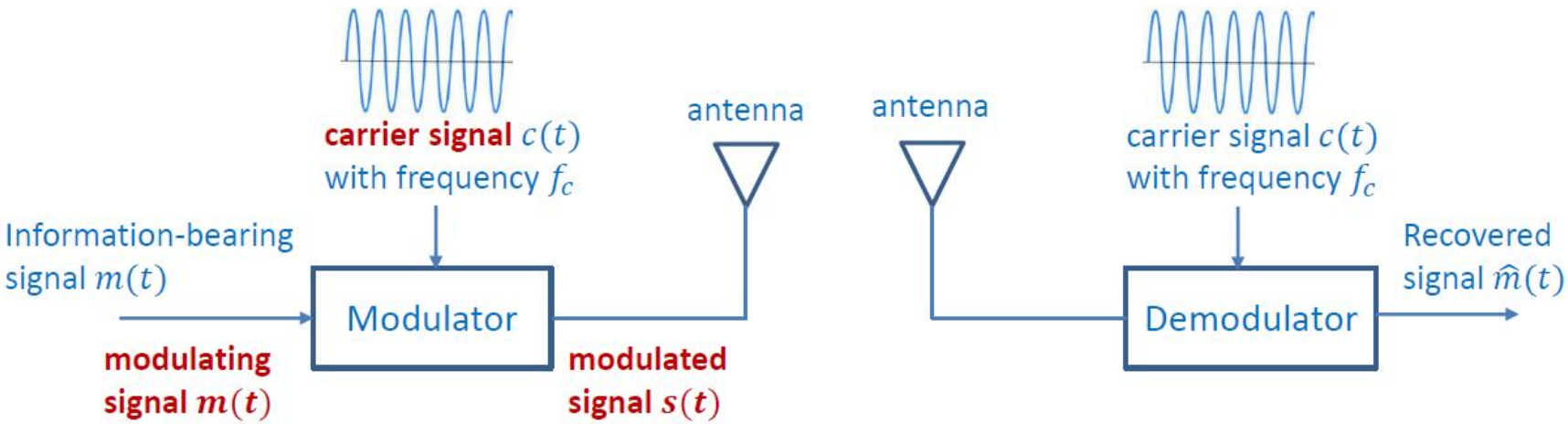

Preliminaries

- **Wireless Signal:**
  - Can be represented in time domain and frequency domain

- Need for Multiple Access?
  - Yes, for multiple users to transmit
  - Like CSMA/CD discussed in INF1006
  - Different Multiple Schemes:
    - Time Division Multiple Access (TDMA)
    - Frequency Division Multiple Access (FDMA)
    - Code Division Multiple Access (CDMA)
    - Orthogonal Frequency Division Multiple Access (OFDMA)

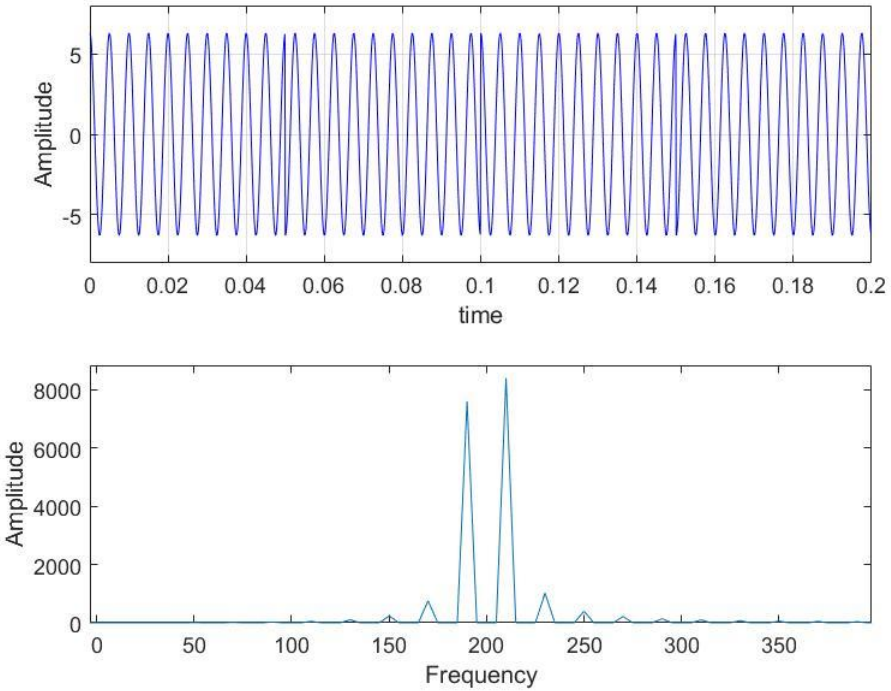

Preliminaries: Multiple Access

- Approaches to share the physical resources among different users

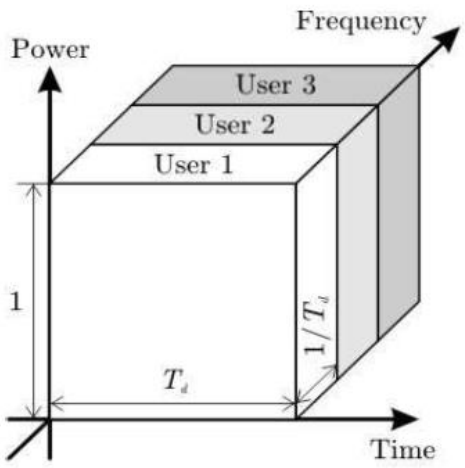

Frequency Division Multiple Access (FDMA)

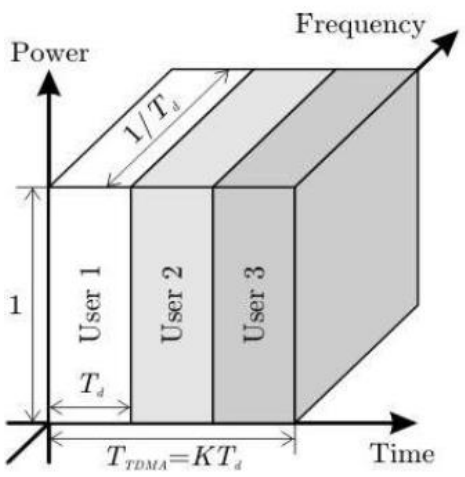

Time Division Multiple Access (TDMA)

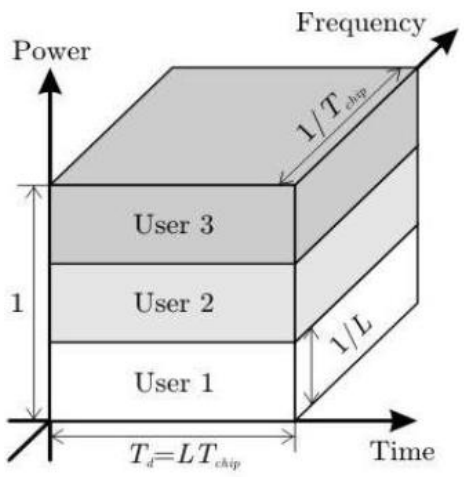

Code Division Multiple Access (CDMA)

Preliminaries: CDMA Transmission different times

User U_1	User U_2	User U_3
$< 1,1,1,1 >$	$< 1,-1,1,-1 >$	$< 1,1,-1,-1 >$
Symbol a_1	Symbol a_2	Symbol a_3
$< a_1, a_1, a_1, a_1 >$	$< a_2, -a_2, a_2, -a_2 >$	$< a_3, a_3, -a_3, -a_3 >$
Received Signal (ignoring the noise)		
$< a_1, a_1, a_1, a_1 >$	$< a_2, -a_2, a_2, -a_2 >$	$< a_3, a_3, -a_3, -a_3 >$
$4a_1$	$4a_2$	$4a_3$

Preliminaries: CDMA Transmission at same time

User U_1	User U_2	User U_3
$< 1,1,1,1 >$	$< 1,-1,1,-1 >$	$< 1,1,-1,-1 >$
Symbol a_1	Symbol a_2	Symbol a_3
$< a_1, a_1, a_1, a_1 >$	$< a_2, -a_2, a_2, -a_2 >$	$< a_3, a_3, -a_3, -a_3 >$
Received Signal (ignoring the noise): $< a_1 + a_2 + a_3, a_1 - a_2 + a_3, a_1 + a_2 - a_3, a_1 - a_2 - a_3 >$		
Despread the received signal. Let $< r_1, r_2, r_3, r_4 >$ be the received signal and $< c_1, c_2, c_3, c_4 >$ be the code of the desired user. Then the symbol transmitted is estimated as $\sum r_i c_i$		
$4a_1$	$4a_2$	$4a_3$

Preliminaries: CDMA – What type of codes?

- Also known as Spreading Sequences
  - PN sequences
    - Pairwise cross correlation: approximately zero

$$\sum_{i} c_{1i} c_{2i} \approx 0$$

  - Orthogonal codes
    - All Pairwise cross correlations are zero.

$$\sum_{i} c_{1i} c_{2i} = 0$$

Preliminaries: OFDMA

- How is it different from the previous multiple access schemes?
  - Each user in TDMA, FDMA or CDMA could transmit only one symbol at a given point of time.
  - Data rate limited by the type of modulation used.
  - However, for OFDMA, we can transmit multiple symbols at a given point of time
- Implementation: Requires N modulators and therefore N demodulators

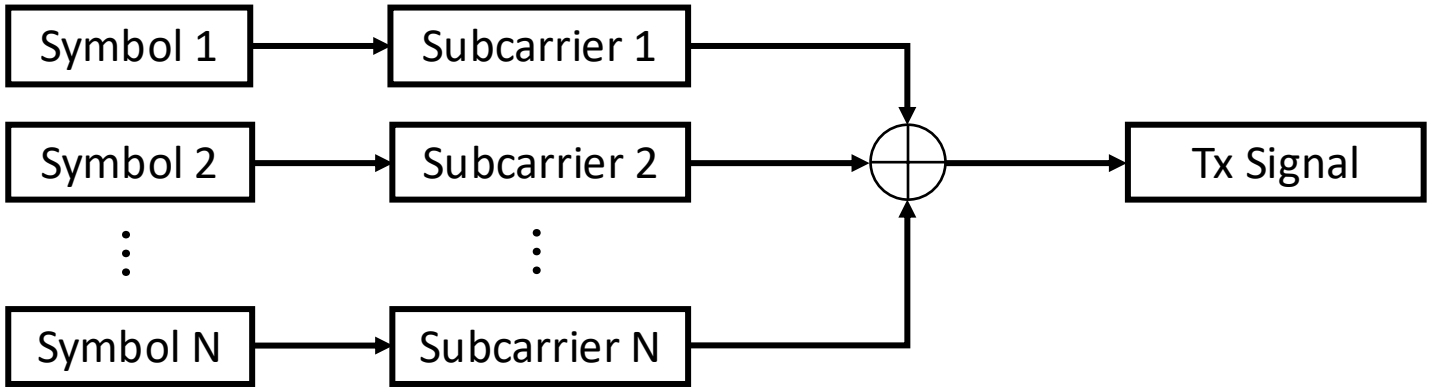

Resource Allocation using OFDMA (Example)

- Time Slot: 0.5 ms i.e., 6 or 7 OFDM symbols.
- Sub-band size: 15kHz
- Physical Resource Block:
  - 12 subcarrier over one time slot.
- Minimum Allocation: 2 PRBs per frame.

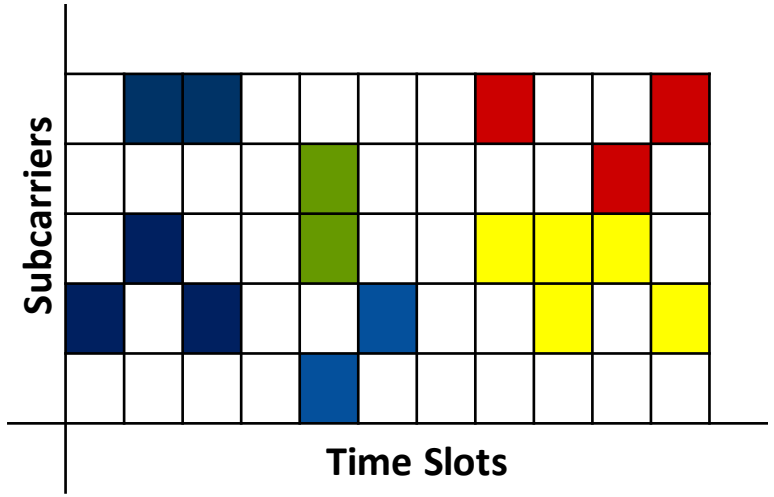

Each box corresponds to one resource block

12 subcarriers on Y-Axis
One Time slot on X-Axis

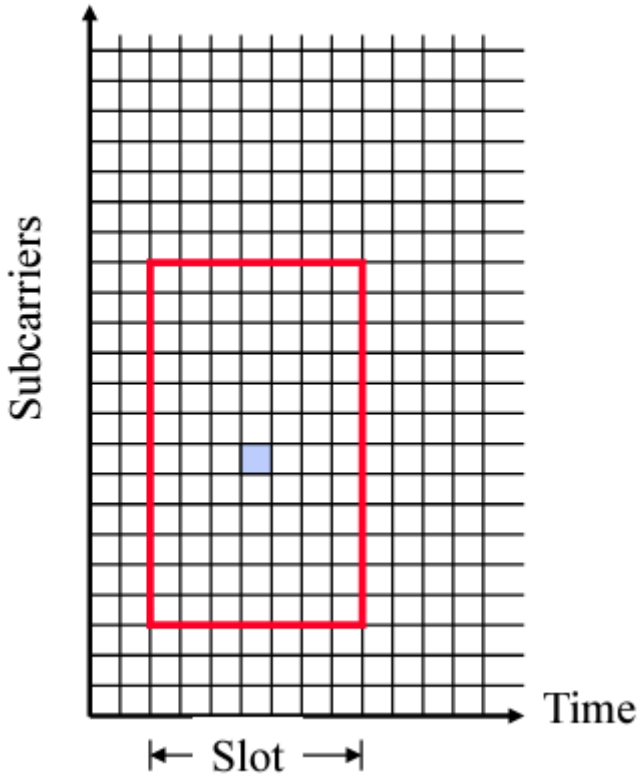

Do not edit
How to change the design

What do you think is the difference between TDMA/FDMA/CDMA and OFDMA?

The Slido app must be installed on every computer you're presenting from

slido

Preliminaries – Guard Band Example for FDMA

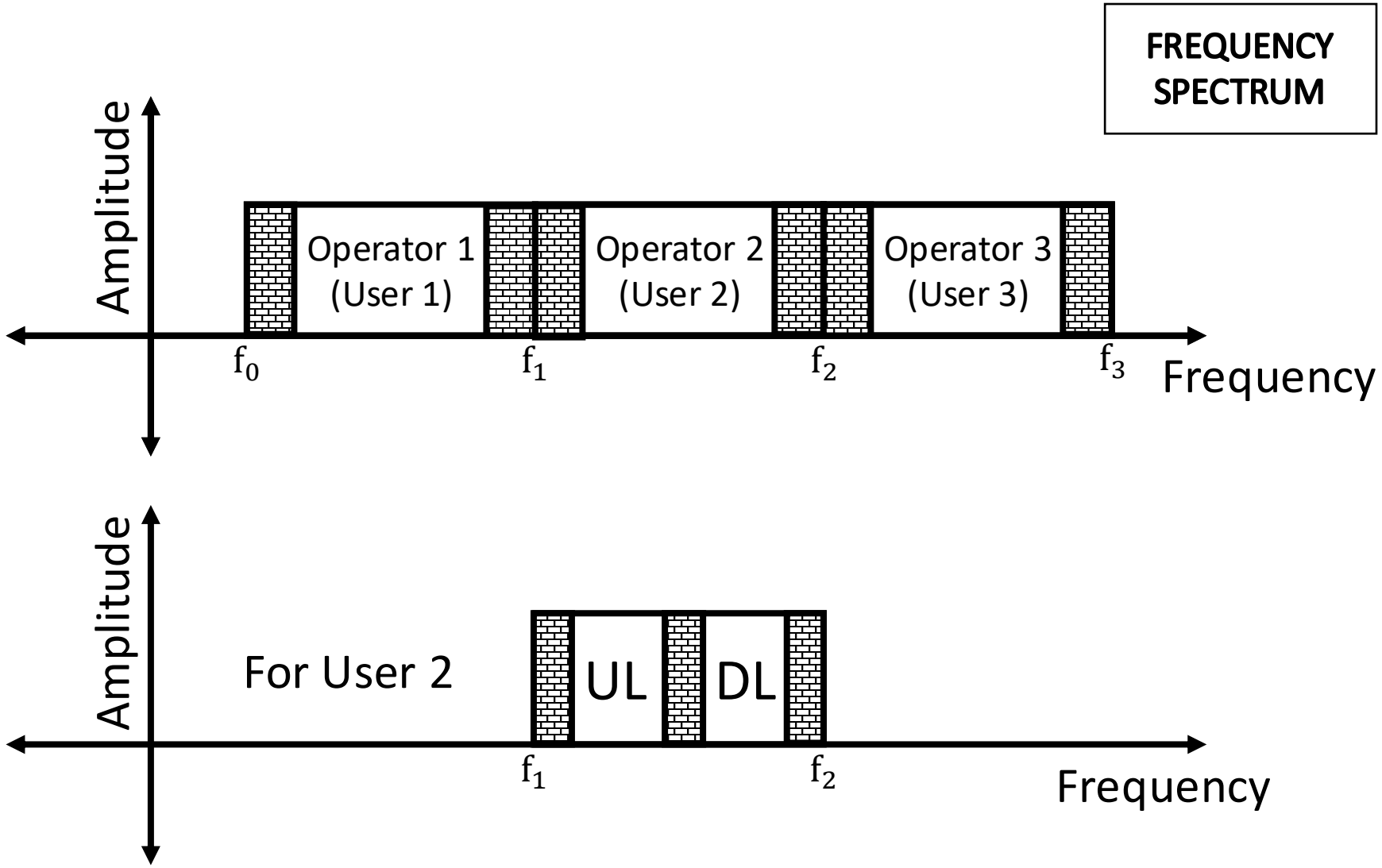

LTE-M: Introduced in 4G/LTE – Advanced

- Machine-Type Applications
  - Three types of IoT:
    - Cameras: High UL traffic, no mobility
    - Fleet tracking: Low traffic, high mobility
    - Meter reading: Very low traffic, no mobility
  - Signaling Overhead Reduction
    - Reduce signaling overhead for devices with infrequent data transfer
    - Expected UE (User Equipment) behavior is communicated to eNB (evolved Node B), indicating expected activity time, idle time, and activity behavior
  - Power consumption optimization
    - Meters may be using battery
    - Power saving mode allows them to sleep for a long time

Narrowband IoT: Introduced in LTE – Advanced Pro

- Narrowband (NB) - IoT is initiative by the Third Generation Partnership Project (3GPP)
- To address the needs of very low data rate devices that need to connect to mobile networks (long range), often low power.
  - As a cellular standard, the goal is to standardize IoT devices to be interoperable and more reliable.
- NB-IoT is a cellular-grade wireless technology that uses OFDMA
  - chips are more complex (increase in cost and power), but the link budgets (better performance) are better.
- NB-IoT targets simpler devices that need to connect to an operator network via licensed spectrum.
- IoT devices cannot move while they have active connection. They must disconnect, move if needed, and reconnect.

NB-IoT

- Uses LTE design extensively e.g. DL: OFDMA, UL: SC-FDMA
- Lower cost than eMTC (Narrow band: supports 180 KHz channel)
- Extended coverage: 164 dB maximum coupling loss or link budget (at least for standalone) in comparison to GPRS link budget of 144dB and LTE of 142.7 dB
  - Link Budget: Allowed power loss in the link = Transmit power - Received power. If a receiver is not sensitive, it needs a larger receive power. Therefore, we need a large transmit power too.
- Low Receiver sensitivity = -141 dBm
- Long battery life: 10 years with 5-Watt Hour battery (depending on traffic and coverage needs)
- Support for massive number of devices: at least 50,000 per cell
- Power Save Mode: LTE devices must perform periodic tracking area updates. NB-IoT devices can extend this update timer to several days.
- Extended Idle Mode Discontinuous Reception (eDRX):
  - Normal LTE devices listen to paging every 1.28s in an idle state.
  - NB-IoT devices can request to extend this to 20.48s to 175 minutes. If the network accepts, the device can power off for that long without losing its state, including the IP address.

NB-IoT (Differences)

- NB-IoT is meant to be used to send and receive small amounts of data
  - a few tens or hundreds of bytes per day
  - Message-based, similar to Sigfox and LoRa, but with a much faster modulation rate that can handle a lot more data than those technologies.
- NB-IoT <u>is not</u> an IP-based communication protocol like LTE-M.
  - Non-IP Data Delivery (NIDD): A Service Capability Exposure Function (SCEF) encapsulates/decapsulates IP packets and sends/receives data without IP headers to/from NB1 device
  - Can't connect to an IP-network and expect to use it like a smartphone.
    - Requires IP tunneling.
  - Targeted for simple IoT applications and is more power efficient than LTE-M but designed for more *infrequent* communication purposes.

Frequency Band for NB-IoT

- 128 kbps using 180 kHz band = Single PRB of 12 subcarriers (12 tones)
- All three deployments invisible to non-NB-IoT devices
- 3 modes of operation:
  - Stand-alone: stand-alone carrier, e.g. spectrum currently used by GERAN (GSM Edge Radio Access Network) systems as a replacement of one or more GSM carriers
  - Guard band: unused resource blocks within a LTE carrier's guard-band
  - In-band: resource blocks within a normal LTE carrier

Deployment Scenarios

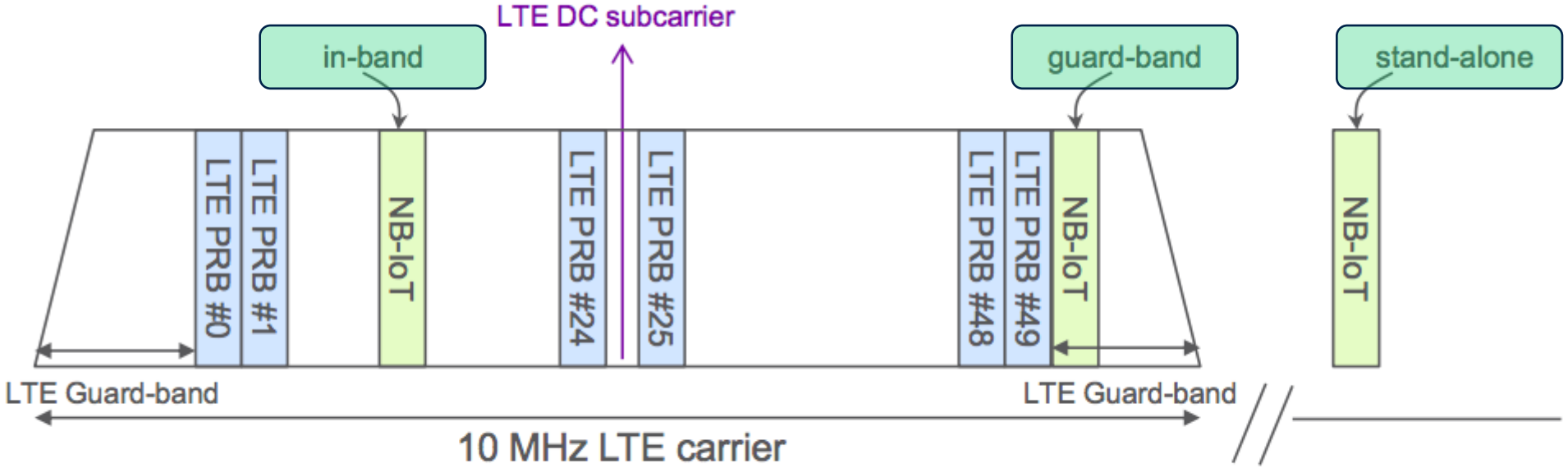

Fig. 1. Examples of NB-IoT stand-alone deployment and LTE in-band and guard-band deployments in the downlink.

https://arxiv.org/ftp/arxiv/papers/1606/1606.04171.pdf

Do not edit
How to change the design

Where do you think NB-IoT can be used and is advantageous over other IoT protocols?

The Slido app must be installed on every computer you're presenting from

slido

Advantages of NB-IoT

- The coverage would be very good.
  - NB-IoT devices rely on 4G coverage, so they would work well indoors and in dense urban areas.
- It has faster response times than LoRa and can guarantee a better quality of service.
- Consumes minimal power when it’s operating.
- Components cost less.
- Provide deeper building penetration than LTE-M.

Disadvantages of NB-IoT

- It is difficult to implement firmware-over-the-air (FOTA) or file transfers. Some of the design specifications for NB-IoT make it such that sending larger amounts of data down to a device is hard.
- Network and tower handoffs will be a problem, so NB-IoT is best suited for primarily static assets, like meters and sensors in a fixed location, rather than roaming assets.

Few Non-Technical Problems (early stages)

- 3GPP specification for NB-IoT has two competing variants
  - Huawei/Vodafone vs. Ericsson/Nokia/Intel.
- Equipment from Huawei is incompatible with equipment from Ericsson (not interoperable)
  - Ericsson approach is a scaled-down, lower power variant of 4G.
  - Huawei approach is a "clean-sheet" approach
- Ericsson has stated that older 4G infrastructure based on Alcatel will not be backwards compatible with NB-IoT. This means that thousands of base stations would have to be changed in the US for carriers to support NB-IoT.

https://www.huawei.com/minisite/4-5g/img/NB-IOT.pdf

How is it going forward?

- Three Key Application Areas in 5G-NR (5G - New Radio)
  - Enhanced Mobile Broadband (eMBB): Better mobile phones and hot spots. High data rates and high user density. Humancentric communications
  - Ultra-Reliable and Low-Latency Communications (URLLC): Vehicle-to-Vehicle communication, Industrial IoT, 3D Gaming. Human and Machine centric communication
  - **Massive Machine Time Communications (mMTC):** Huge number of devices, low data rate, low power. IoT with long battery life.
    - Includes support to LTE-M and NB-IoT as well.

NB-IoT in 5G: A Smart Parking Solution

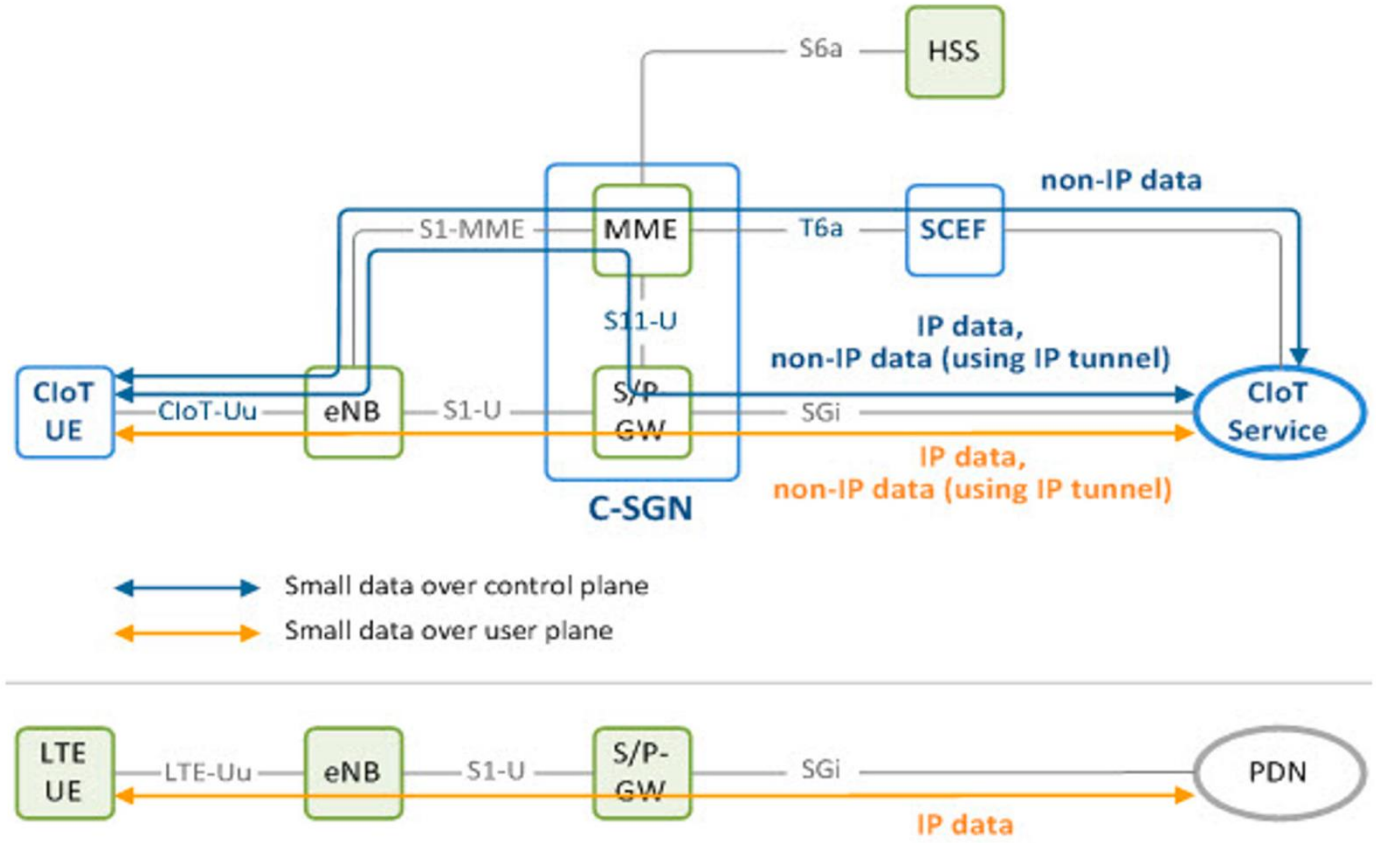

Ref: https://www.mdpi.com/1999-5903/14/8/219?type=check_update&version=1

5G NR: Three main Service Classes

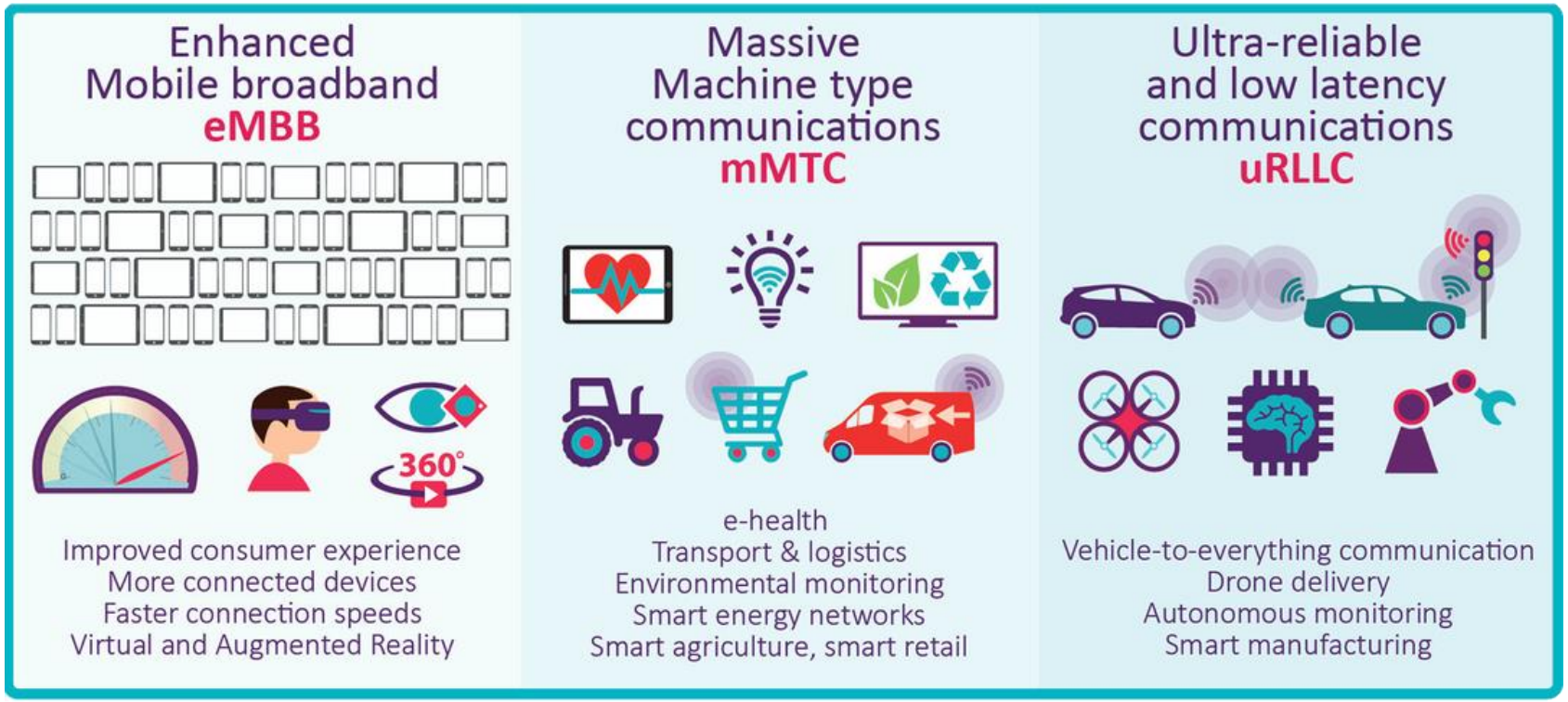

Better mobile phones and hot spots. High data rates, high user density. Human centric communications

Very large number of devices, low data rate, low power. IoT with long battery life time. Addition to GSM, LoRa, Zigbee, etc. Machine-centric communication

Vehicle-to-Vehicle communication, Industrial IoT, 3D Gaming. Human and Machine centric communication

5G mMTC: Enabled using Network Slicing

- 5G networks are designed to allow each of the three service areas to exist as separate networks, while using the same physical infrastructure.
- Network Slicing is the system of dividing bandwidth and resources up across these different areas, allowing different service functions to be customised.
  - This means each application can access the required resource simultaneously, with higher priority applications prioritised.
- Each “slice” of the network can be configured independently in terms of security, quality of service and network provisioning.

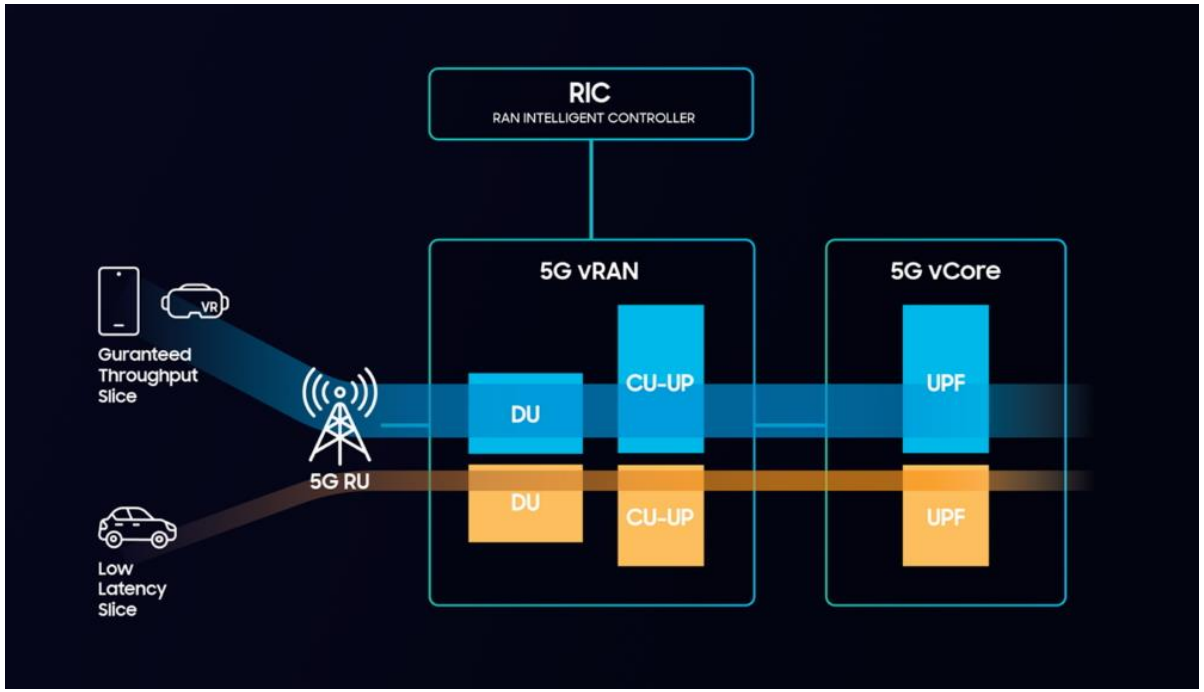

Do not edit
How to change the design

Audience Q&A

The Slido app must be installed on every computer you're presenting from

slido

Additional Reading (optional)

- https://www.linkedin.com/pulse/nb-iot-narrow-band-iot-operation-5g-system-rahim-navaei/
- https://www.mdpi.com/1424-8220/19/11/2613#B84-sensors-19-02613